Energy Efficiency in aeration control
Part 2: Control valves

Control valves are used for the control of the air flow rate into one aerated tank or zone on one hand. On the other hand, control valves organize the distribution of air between the different aeration tanks in the sewage treatment plant with a common header system and a central blower station. They typically should close gas-tight for the use in flexible zones.

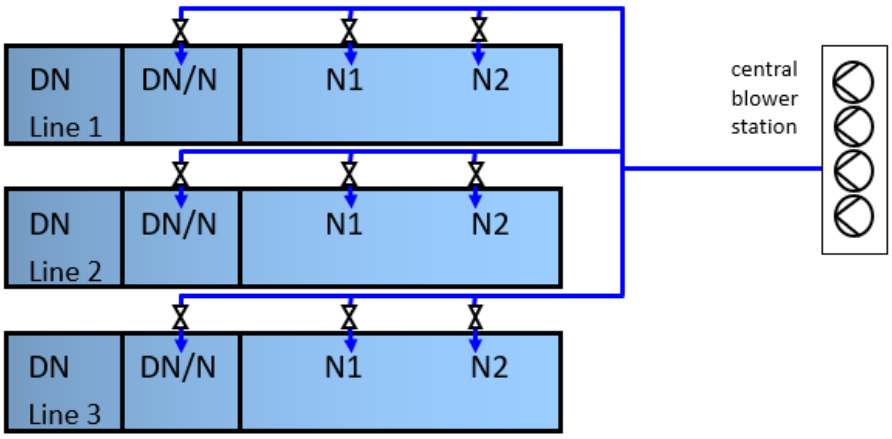

By throttling the orifice of the valve, a pressure drop is created, which can be used for control and distribution of the air flow. From technical point of view there is a minimum pressure drop for a stable control system necessary, depending on the number of valves in the system as well as the local pressure situation (water level in the tanks, type and age of aerators, pressure drop in the pipping system). The minimum value is ranging at approx. 8-12 mbar, but can be much higher. In multistage aerated plants the water level can vary between the first and last aerated zone of 10 cm and more. This will increase the minimum level accordingly.

Total pressure balance shows following structure regarding counter-pressure, which will determine the header pressure in the system:

Header pressure = Water level above aerators (1 cm ≈ 1 mbar) + pressure drop aerators + pressure drop of piping system (outlet blower to the inlet 1st diffuser) + pressure drop of the control valves + pressure drop of further BFV + some safety distance

One of the most important requirements on the valve is a low pressure drop of the control valve, but not only at 100% stroke (fully open) also in the typical range of control mode.

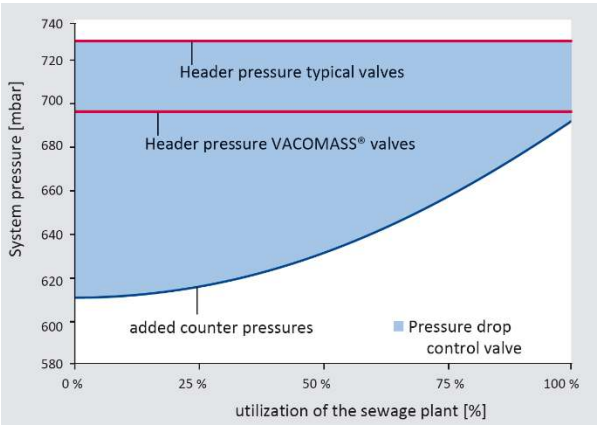

Each Millibar or Hekto-Pascal, which can be saved, will give a direct energy saving.

30 mbar reduction of header pressure at 600 mbar header pressure will lead to a direct saving of 5% of the blower´s power consumption (assuming same efficiency).

[1] defines the typical pressure drop of the piping system from blower outlet to first diffuser inlet incl. all fittings and control valves, which should not exceed 40-50 mbar in total.

BINDER GmbH
Buchbrunnenweg 18
89081 Ulm
Phone: +49 731 18998-0
Fax: +49 731 18998-88

Contact person: Dipl.-Ing. Manuela Charatjan
Mail: support@bindergroup.info
Web: www.bindergroup.info

BINDER
BINDERGROUP

Beside pressure drop there are further properties influence the efficiency of the valves and can generate indirectly up to another 10% energy savings and less maintenance costs:

- As much as possible linear operational characteristic curve which will lead to a constant amplification factor
- Small mechanical slag of the valve, slow running and very precise actuators which will lead to a high positioning accuracy / repeatability and so improve control accuracy, respectively reduce deviations from DO-setpoint

A common characteristic value of a valve is the Kv value. The Kv value corresponds to the water flow through a valve (in m^3/hr) at a pressure difference of about one bar (exactly 0.98 bar) and a water temperature of 5°C to 30°C. A Kv value only applies to the associated stroke (opening degree) of a valve. The Kv value of a valve at rated lift (100% stroke) is called the Kvs value. The determination of the Kv value is regulated in Technical Standard Paper VDI / VDE 2173 [2].

A comparison of control valves based on Kv value only is not meaningful. Neither pressure drop nor control accuracy are considered. Especially manufacturer of valves, developed originally for water and used for aeration air, supply kv values and try to use it for comparisons. But good water valve design is not ideally for air control valves. Butterfly valves are suited very well for ON/ OFF operation, but shouldn´t used any more for control purpose. [1]

At the moment there are world-wide only two valves, especially developed and optimized for aeration air as requested in the German Standard paper DWA-M 229-1[1]: Binder´s VACOMASS® jet control valve and Binder´s VACOMASS elliptical diaphragm control valve. Both fulfil all requirements of the new standard paper.

Literature:
[1] DWA-M 229-1: Systems for aeration and mixing in activated sludge plants - Part 1: Planning, tender and execution. Beuth Verlag September 2017
[2] VDI/ VDE 2173: Fluidic characteristic quantities of control valves and their determination. Beuth Verlag September 2007

Related VACOMASS® products:
VACOMASS® control valves & actuator

BINDER GmbH
Buchbrunnenweg 18
89081 Ulm
Phone: +49 731 18998-0
Fax: +49 731 18998-88

Contact person: Dipl.-Ing. Manuela Charatjan
Mail: support@bindergroup.info
Web: www.bindergroup.info

BINDER
BINDERGROUP