Energy Efficiency in aeration control
Part 3: Intelligent adaptive aeration controller

Advanced aeration control requires first information from process. There must be various sensors in the tanks to get actual values – “the detective”.

Secondly there must be an intelligent controller, taking plant situation, actual load and actual boundary conditions into consideration – “the brain”.

Thirdly there must be suited actuators to adjust the results from controller fast and precise – “the arms and legs”.

Simple DO-controller can be used for direct adjustment of the blower in smaller systems, when one blower (station) is directly connected to one tank and butterfly valves are typically used. The difference between DO-set and actual DO (control variable) is determined and blower frequency is increased/ decreased accordingly. The DO-set is fixed and must be chosen high for safety, because no information about degradation of ammonia is known or used.

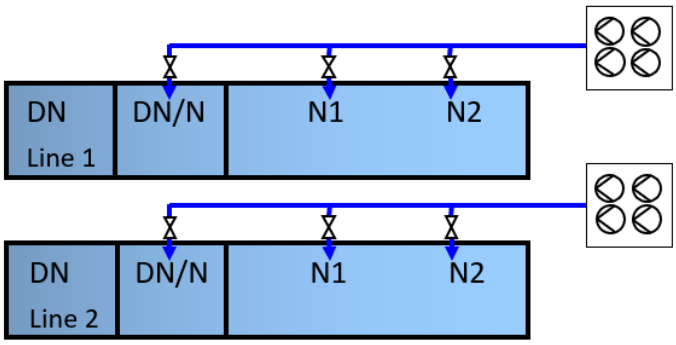

Because of time delay in the control loop this control strategy is not suited well in system with various valves and when load is changing.

If any further process parameter is known, it should be used. [1] states the air flow rate as a suited further parameter to be used as a control variable in the loop. The adjustment can be realized faster because deviations are detected earlier, the DO-concentration becomes smoother using a PI- or PID-controller. Summer and winter situation must be adjusted manually. The plant runs at a fixed DO-setpoint, which can be slightly decreased without any process risk.

Knowing actual ammonia concentration, a meshed control loop can be realized. Based on actual load the DO-setpoint can be adjusted. At the same time less dissolved oxygen is recirculated back to the denitrification tank and flexible zones can stay non-aerated as long as possible. Denitrification can be improved and energy consumption will go down for 10-15%. [2]

Control accuracy can be improved further, by using a self-learning and self-adjusting P-part in the controller to overcome the remaining off-set. Considering beside short past situation (I-part) also longer time past a multi-stage I-part can improve the dynamic control performance.

Best control performance can be achieved by considering further process parameter e.g. water temperature and salinity (conductivity), which influence the solution of oxygen in the water. This makes the control loop again more stable and offers further opportunities like a reduction of the DO-setpoint, which can lower power consumption again for some percentages.

Variable zones offer an additional buffer and safety regarding nitrification and improved denitrification in normal load situation. [3] describes all common control strategies, also the control of internal recirculation rate based on nitrate concentration and dosing of supplemental carbon source.

Automatic adjustment of header pressure is today already a standardized method for further 8-10% energy reduction and prevention of over-aeration in low-load times. The handling of several

BINDER GmbH
Buchbrunnenweg 18
89081 Ulm
Phone: +49 731 18998-0
Fax: +49 731 18998-88

Contact person: Dipl.-Ing. Manuela Charatjan
Mail: support@bindergroup.info
Web: www.bindergroup.info

blower groups should be possible, in case the plant becomes expanded and new stage has a different water level or a separate blower station only. So there can be several header pressure setpoints in one plant necessary.

But also further functions regarding maintenance of the aerators (flexing and cleaning) should be automized.

Of course, all parameter and limits should be open on the display (password-secured) and the operator must be trained to work with the system. If basic configuration and adjustment was done by process specialists, the operator should be able to influence the aeration controller by adjusting 2-3 parameter only. A black-box controller shouldn´t be accepted by the operator.

If the aeration control system offers all these smart functions, effluent quality should comply to permitted limits regarding nitrogen removal in all load situations. Direct savings in energy and supplemental carbon can be achieved easily.

Literature:

[1] DWA-M 264: Gasdurchflussmessungen auf Abwasserbehandlungsanlagen (EN: Gas flow measurements in sewage treatment plants). Beuth Verlag, Mai 2015

[2] Maureen D. Neville: Design and operation of advanced aeration control systems. NEWEA 2018 – Conference and Exhibit, Session 10, January 2018

[3] DWA-A 268: Automatisierung von einstufigen Belebungsanlagen (EN: Automation of one-stage activated sludge plants). Beuth Verlag, August 2016

Related VACOMASS® products:

VACOMASS® flexcontrol with the unique flexalgorithm

BINDER GmbH
Buchbrunnenweg 18
89081 Ulm
Phone: +49 731 18998-0
Fax: +49 731 18998-88

Contact person: Dipl.-Ing. Manuela Charatjan
Mail: support@bindergroup.info
Web: www.bindergroup.info